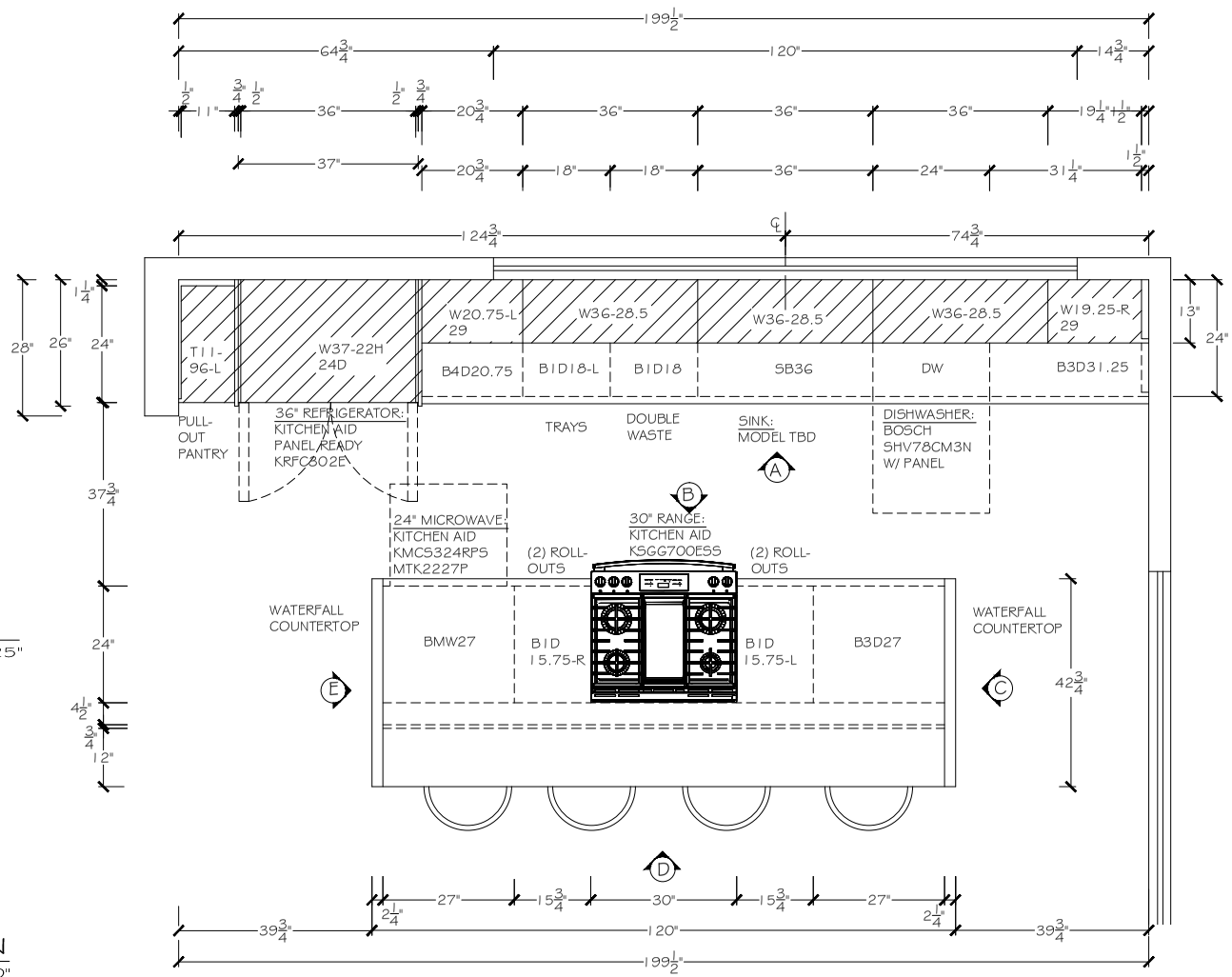

KITCHEN

CEILING HT: 119.625"

FLOOR PLAN

SCALE: 1/2" = 1'-0"

Tervola Designs | Kitchens | Bathrooms | Renovations | 142 Kupuohi St, Ste F6, Lahaina, HI 96761 | 808.385.9971 | www.tervoladesigns.com					EISMON RESIDENCE	KITCHEN	DRAWINGS ARE FOR ILLUSTRATION PURPOSES ONLY, EXACT LOCATIONS & CONFIGURATIONS MAY VARY DUE TO JOBSITE CONDITIONS. APPROVED BY : X _____ X _____
PAGE NUMBER: 1 OF 14	DATE: JUNE 12, 2025	REVISION#	DESIGNER: CINDY TERVOLA		THIS IS AN ORIGINAL DESIGN AND MUST NOT BE RELEASED OR COPIED UNLESS APPLICABLE FEE HAS BEEN PAID AND ORDER PLACED. COPYRIGHT. ALL RIGHTS RESERVED		

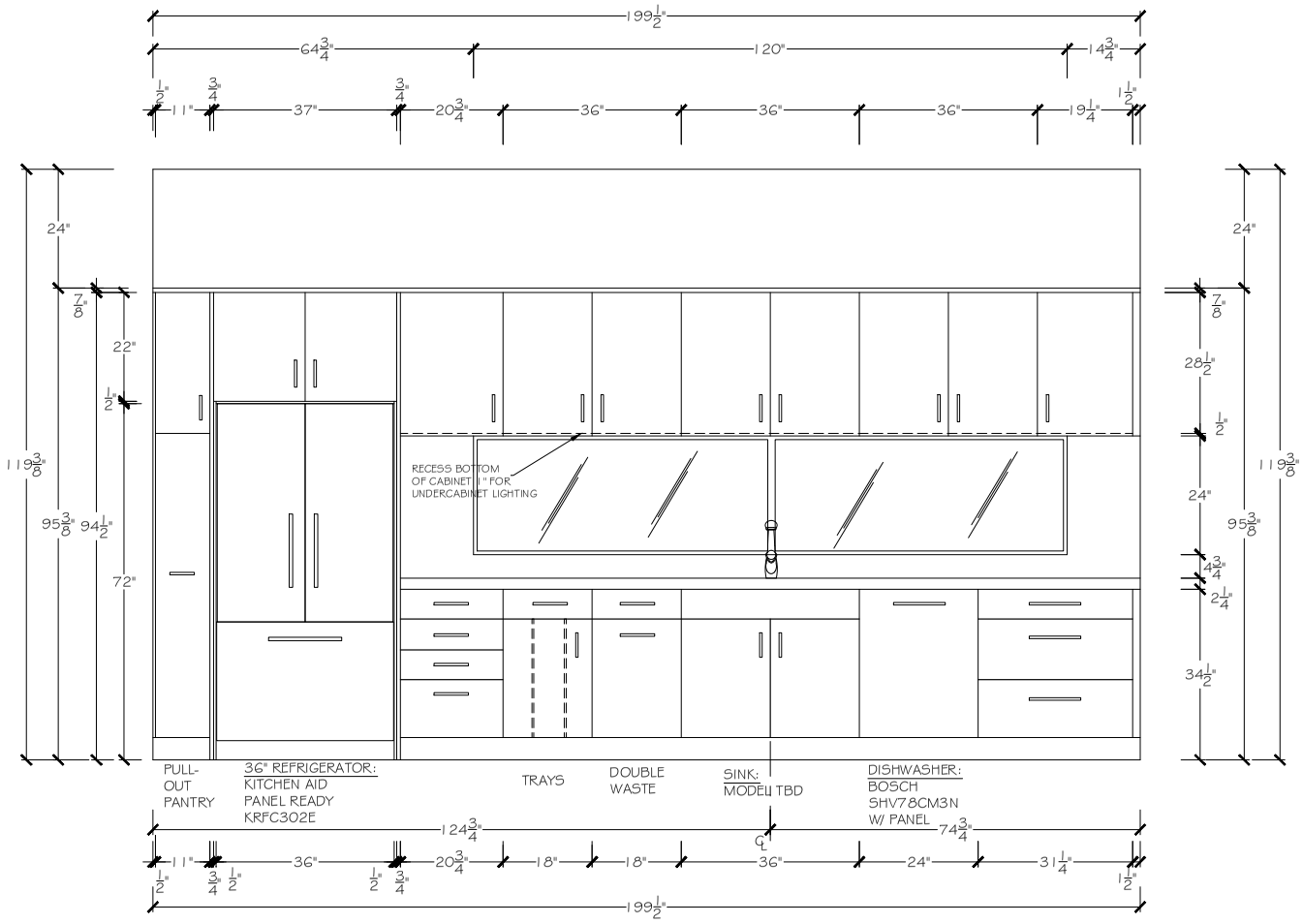

A ELEVATION

ELEVATION

SCALE: 1/2" = 1'-0"

Tervola Designs | Kitchens | Bathrooms | Renovations | 142 Kupuohi St, Ste F6, Lahaina, HI 96761 | 808.385.9971 | www.tervoladesigns.com					EISMON RESIDENCE	KITCHEN	DRAWINGS ARE FOR ILLUSTRATION PURPOSES ONLY, EXACT LOCATIONS & CONFIGURATIONS MAY VARY DUE TO JOBSITE CONDITIONS. APPROVED BY : X _____ X _____
PAGE NUMBER 2 OF 14	DATE: JUNE 12, 2025	REVISION#	DESIGNER: CINDY TERVOLA		THIS IS AN ORIGINAL DESIGN AND MUST NOT BE RELEASED OR COPIED UNLESS APPLICABLE FEE HAS BEEN PAID AND ORDER PLACED. COPYRIGHT. ALL RIGHTS RESERVED		

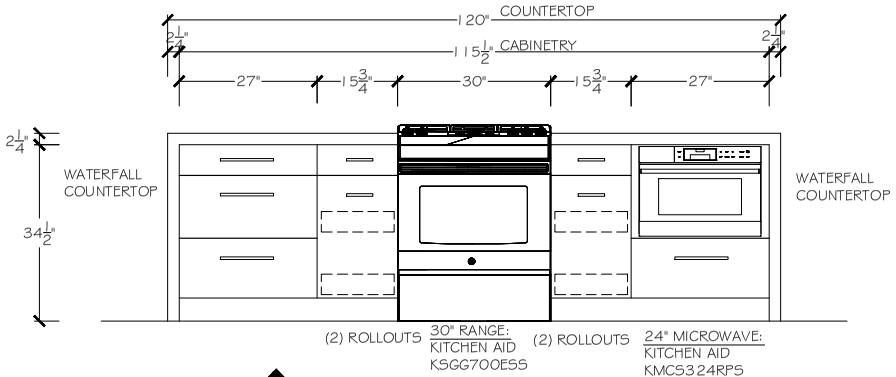

B ELEVATION

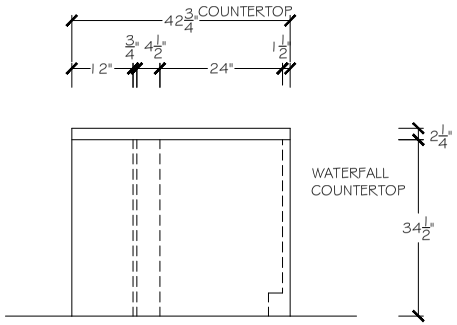

C ELEVATION

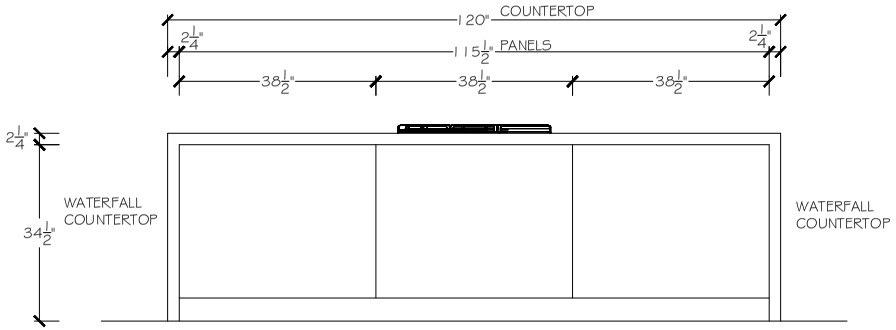

D ELEVATION

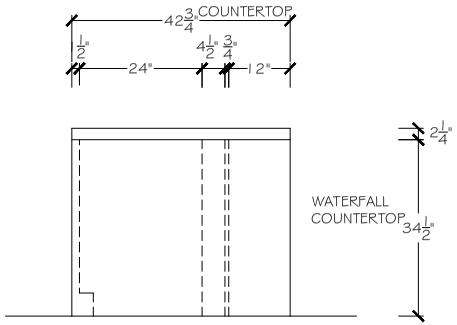

E ELEVATION

ELEVATIONS

SCALE: 1/2" = 1'-0"

THIS IS AN ORIGINAL DESIGN AND MUST NOT BE RELEASED OR COPIED UNLESS APPLICABLE FEE HAS BEEN PAID AND ORDER PLACED. COPYRIGHT. ALL RIGHTS RESERVED

DRAWINGS ARE FOR ILLUSTRATION PURPOSES ONLY, EXACT LOCATIONS & CONFIGURATIONS MAY VARY DUE TO JOBSITE CONDITIONS.

APPROVED BY :

X _____ X _____

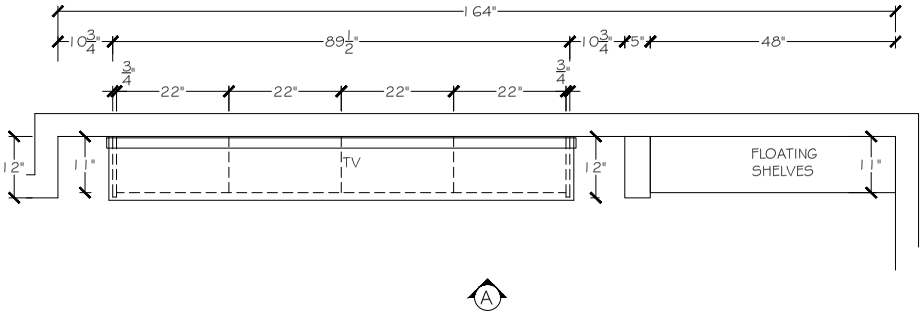

LIVING ROOM

CEILING HT: 119.625"

FLOOR PLAN

SCALE: 1/2" = 1'-0"

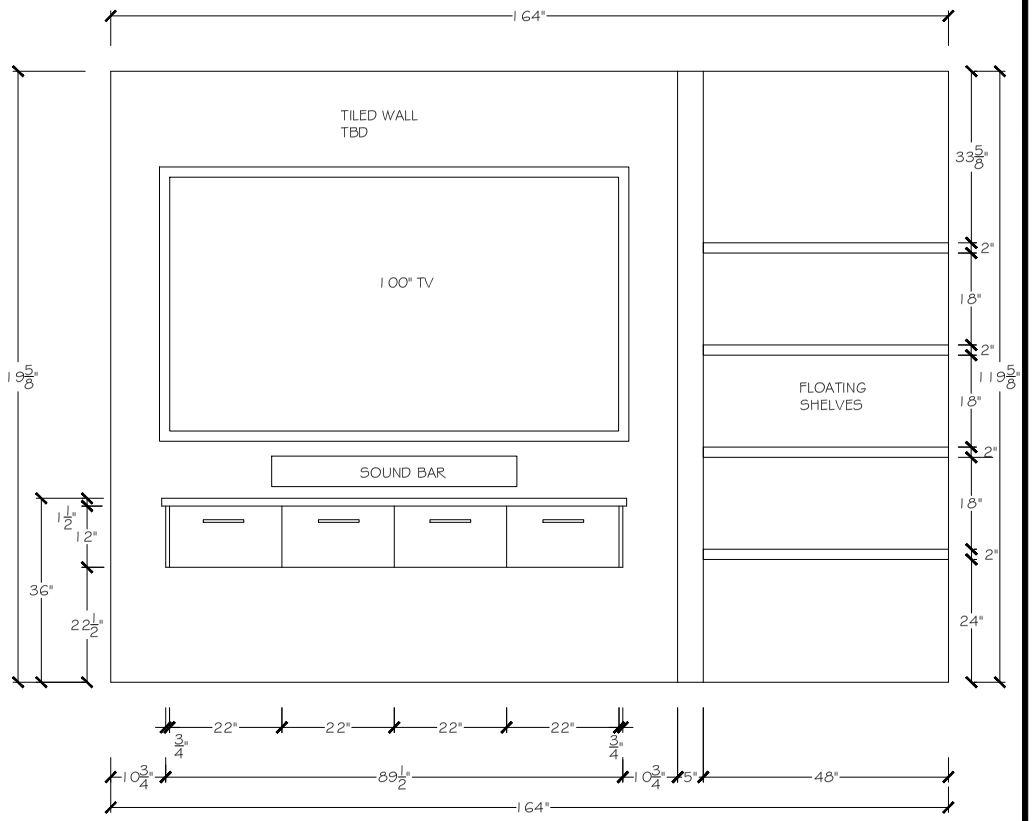

A ELEVATION

ELEVATION

SCALE: 1/2" = 1'-0"

Tervola Designs | Kitchens | Bathrooms | Renovations | 142 Kupuohi St, Ste F6, Lahaina, HI 96761 | 808.385.9971 | www.tervoladesigns.com					EISMON RESIDENCE	LIVING ROOM	DRAWINGS ARE FOR ILLUSTRATION PURPOSES ONLY, EXACT LOCATIONS & CONFIGURATIONS MAY VARY DUE TO JOBSITE CONDITIONS. APPROVED BY : X _____ X _____
PAGE NUMBER 4 OF 14	DATE: JUNE 12, 2025	REVISION#	DESIGNER: CINDY TERVOLA		THIS IS AN ORIGINAL DESIGN AND MUST NOT BE RELEASED OR COPIED UNLESS APPLICABLE FEE HAS BEEN PAID AND ORDER PLACED. COPYRIGHT. ALL RIGHTS RESERVED		

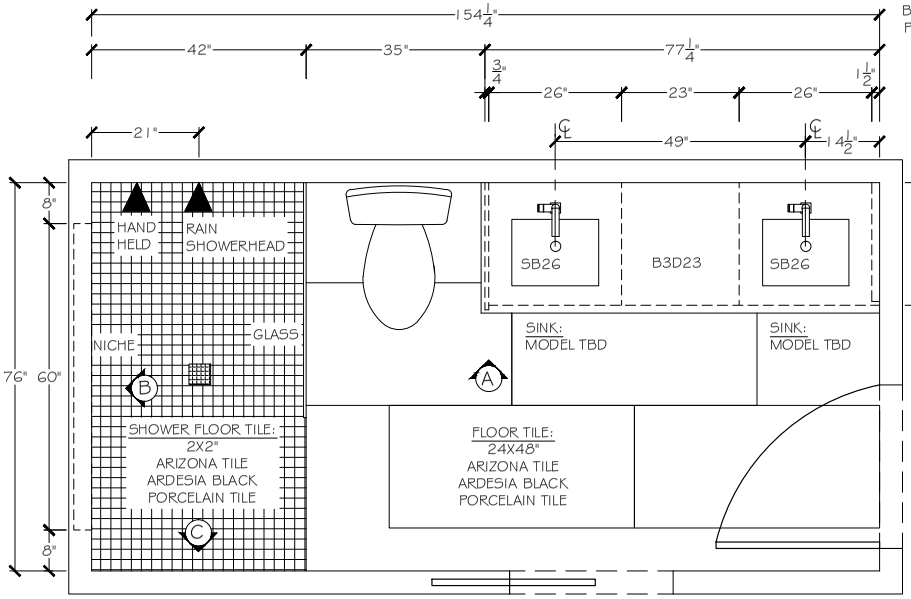

PRIMARY BATH

CEILING HT: 119.375"

FLOOR PLAN

SCALE: 1/2" = 1'-0"

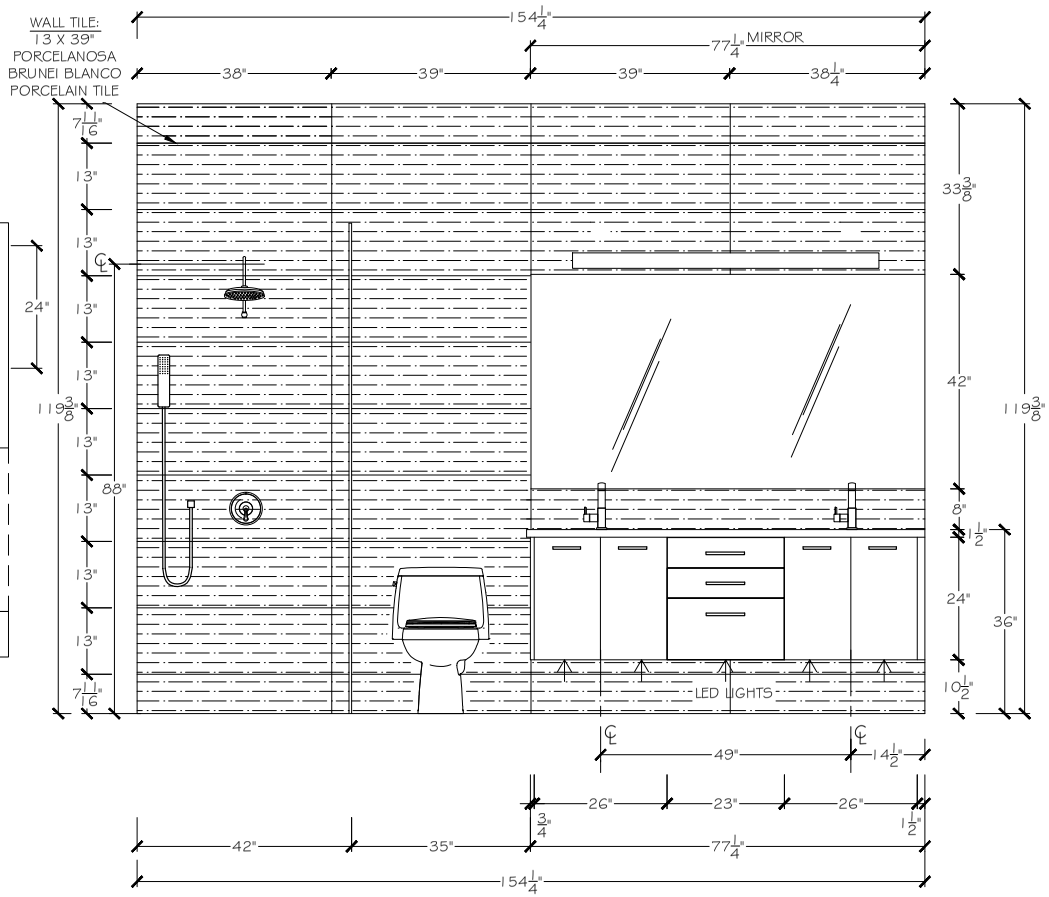

A ELEVATION

ELEVATION

SCALE: 1/2" = 1'-0"

Tervola Designs | Kitchens | Bathrooms | Renovations | 142 Kupuohi St, Ste F6, Lahaina, HI 96761 | 808.385.9971 | www.tervoladesigns.com					EISMON RESIDENCE	PRIMARY BATH 112	DRAWINGS ARE FOR ILLUSTRATION PURPOSES ONLY, EXACT LOCATIONS & CONFIGURATIONS MAY VARY DUE TO JOBSITE CONDITIONS. APPROVED BY : X _____ X _____
PAGE NUMBER 5 OF 14	DATE: JUNE 12, 2025	REVISION#	DESIGNER: CINDY TERVOLA				

THIS IS AN ORIGINAL DESIGN AND MUST NOT BE RELEASED OR COPIED UNLESS APPLICABLE FEE HAS BEEN PAID AND ORDER PLACED. COPYRIGHT. ALL RIGHTS RESERVED

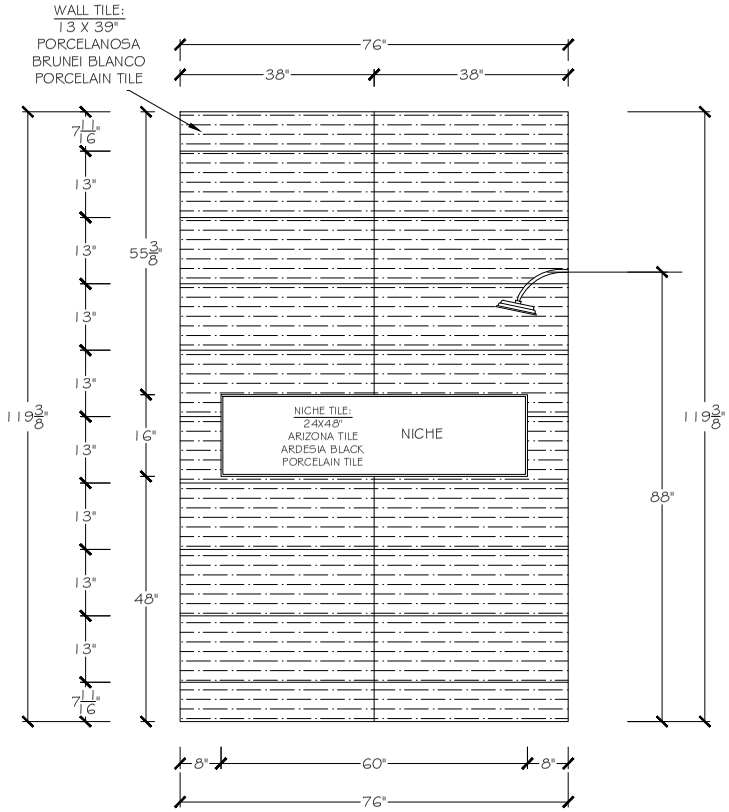

B ELEVATION

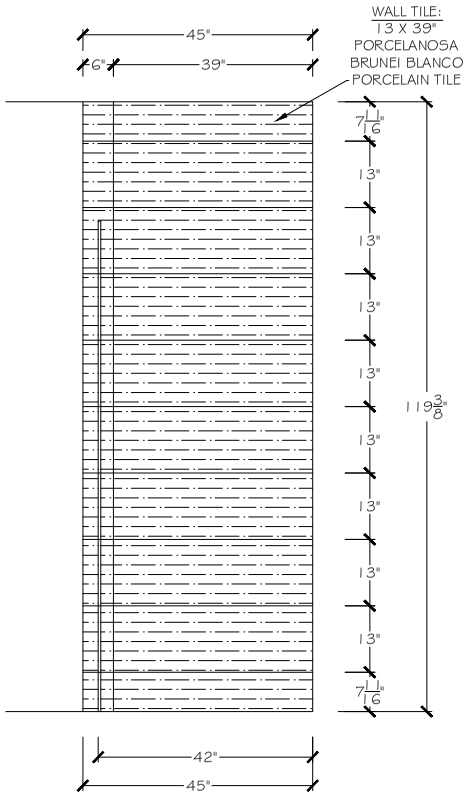

C ELEVATION

ELEVATIONS

SCALE: 1/2" = 1'-0"

Tervola Designs | Kitchens | Bathrooms | Renovations | 142 Kupuohi St, Ste F6, Lahaina, HI 96761 | 808.385.9971 | www.tervoladesigns.com					EISMON RESIDENCE	PRIMARY BATH 112	DRAWINGS ARE FOR ILLUSTRATION PURPOSES ONLY, EXACT LOCATIONS & CONFIGURATIONS MAY VARY DUE TO JOBSITE CONDITIONS. APPROVED BY : X _____ X _____
PAGE NUMBER 6 OF 14	DATE: JUNE 12, 2025	REVISION#	DESIGNER: CINDY TERVOLA		THIS IS AN ORIGINAL DESIGN AND MUST NOT BE RELEASED OR COPIED UNLESS APPLICABLE FEE HAS BEEN PAID AND ORDER PLACED. COPYRIGHT. ALL RIGHTS RESERVED		

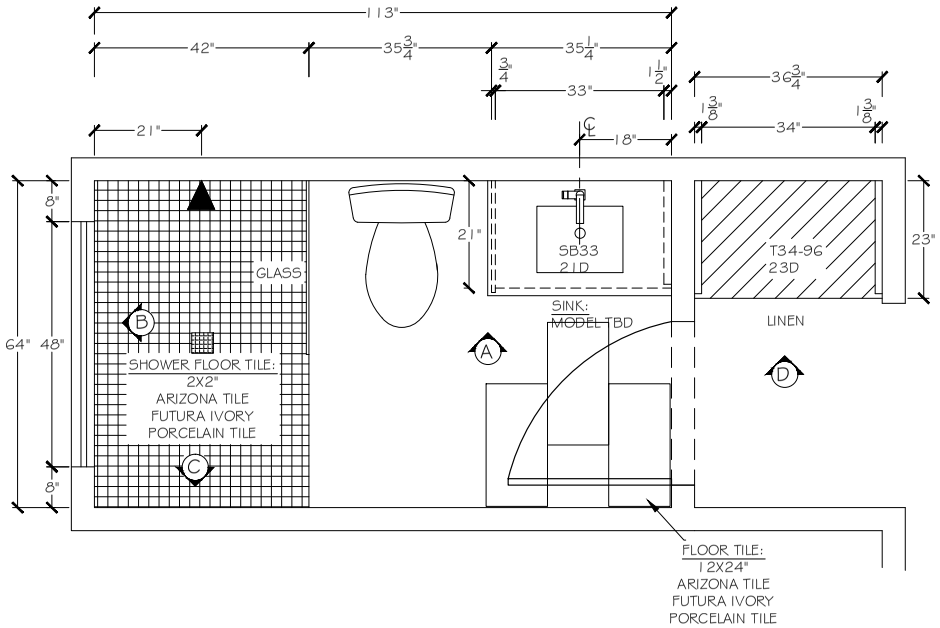

BATH 113

CEILING HT: 119.375"

FLOOR PLAN

SCALE: 1/2" = 1'-0"

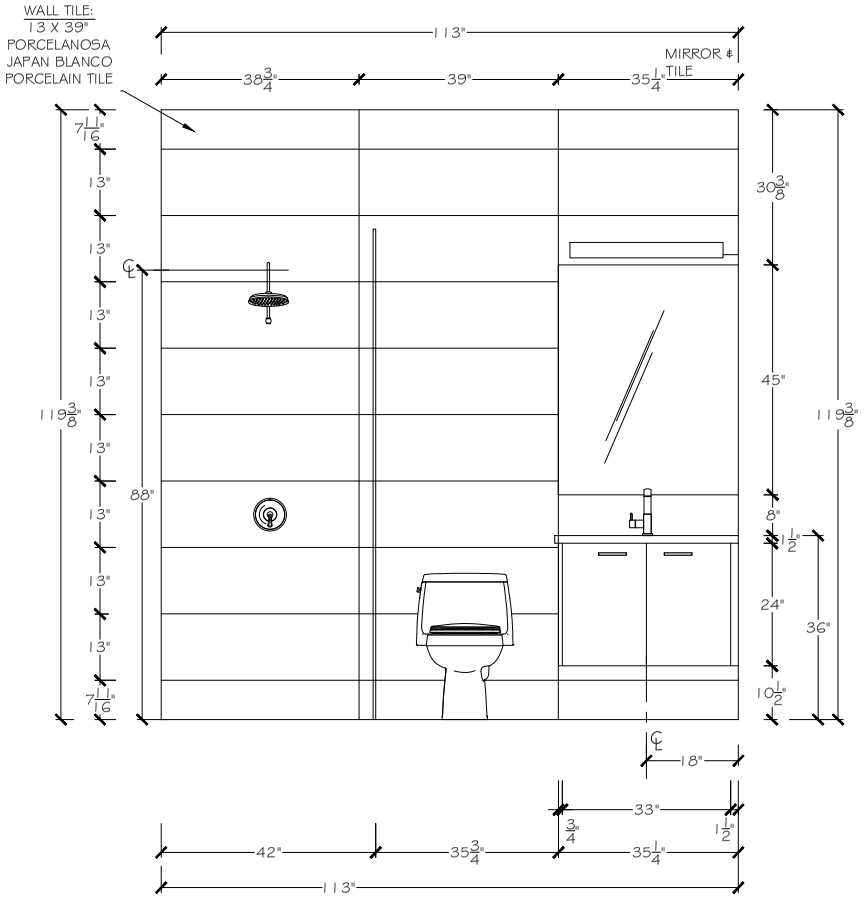

A ELEVATION

ELEVATION

SCALE: 1/2" = 1'-0"

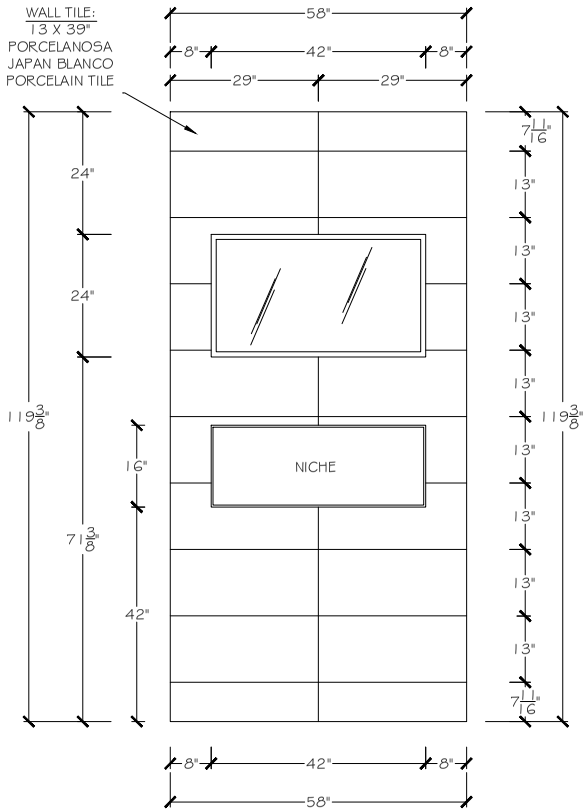

B ELEVATION

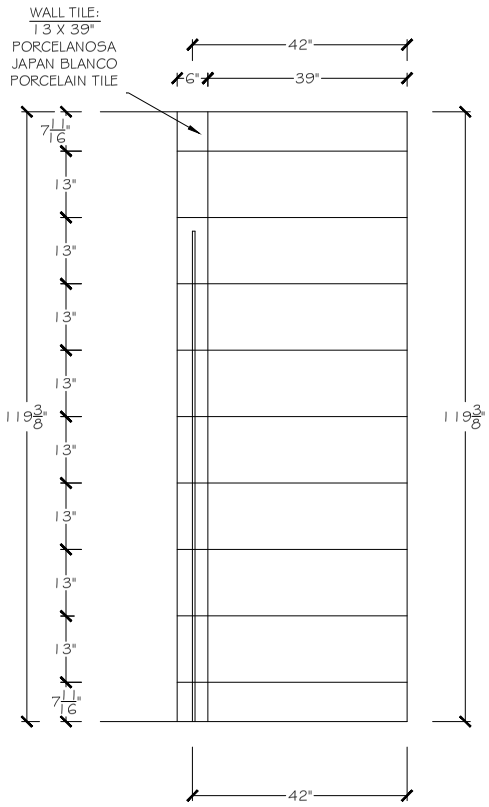

C ELEVATION

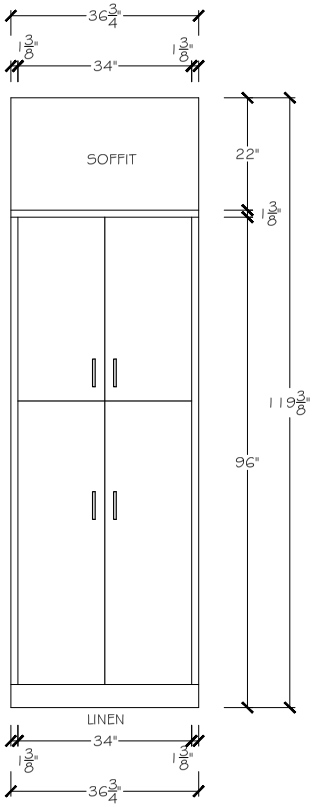

D ELEVATION

ELEVATIONS

SCALE: 1/2" = 1'-0"

THIS IS AN ORIGINAL DESIGN AND MUST NOT BE RELEASED OR COPIED UNLESS APPLICABLE FEE HAS BEEN PAID AND ORDER PLACED. COPYRIGHT. ALL RIGHTS RESERVED

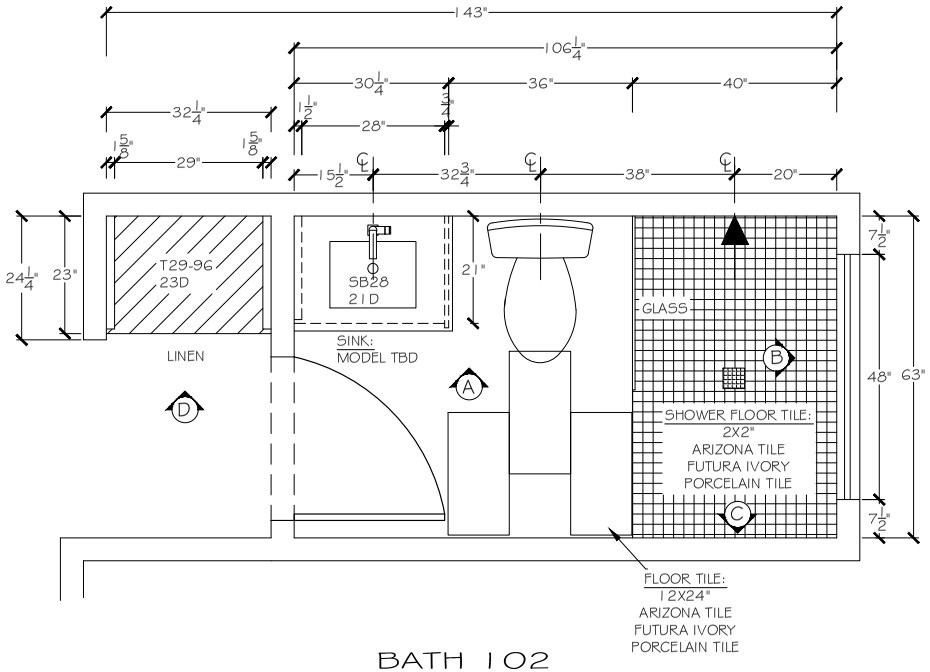

BATH 102

CEILING HT: 119.375"

FLOOR PLAN

SCALE: 1/2" = 1'-0"

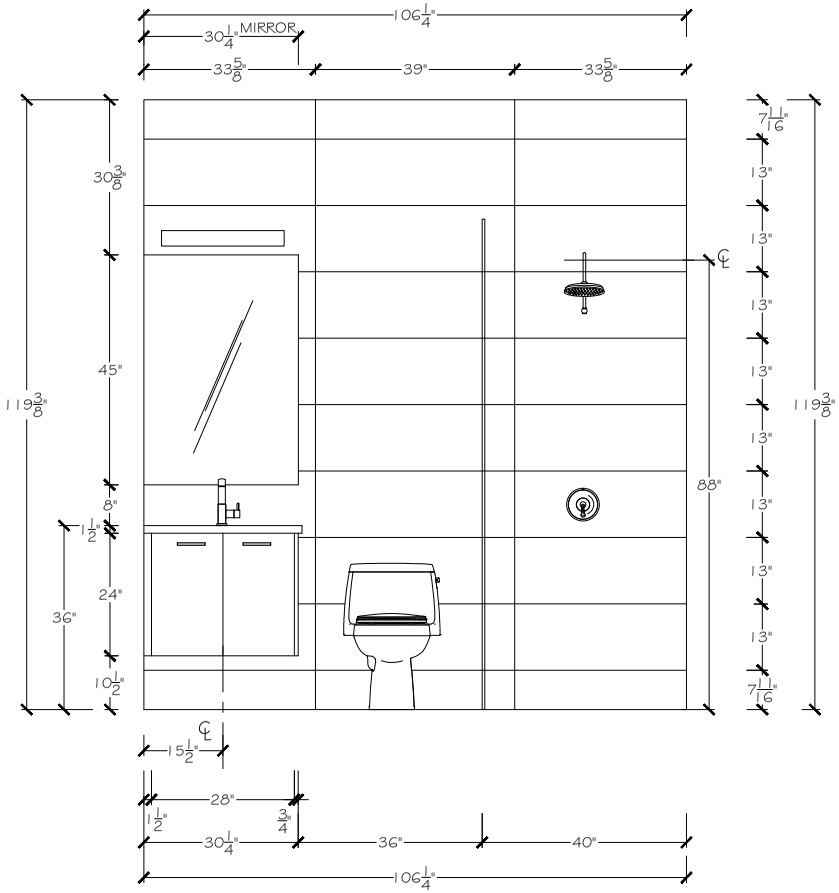

A ELEVATION

ELEVATION

SCALE: 1/2" = 1'-0"

THIS IS AN ORIGINAL DESIGN AND MUST NOT BE RELEASED OR COPIED UNLESS APPLICABLE FEE HAS BEEN PAID AND ORDER PLACED. COPYRIGHT. ALL RIGHTS RESERVED

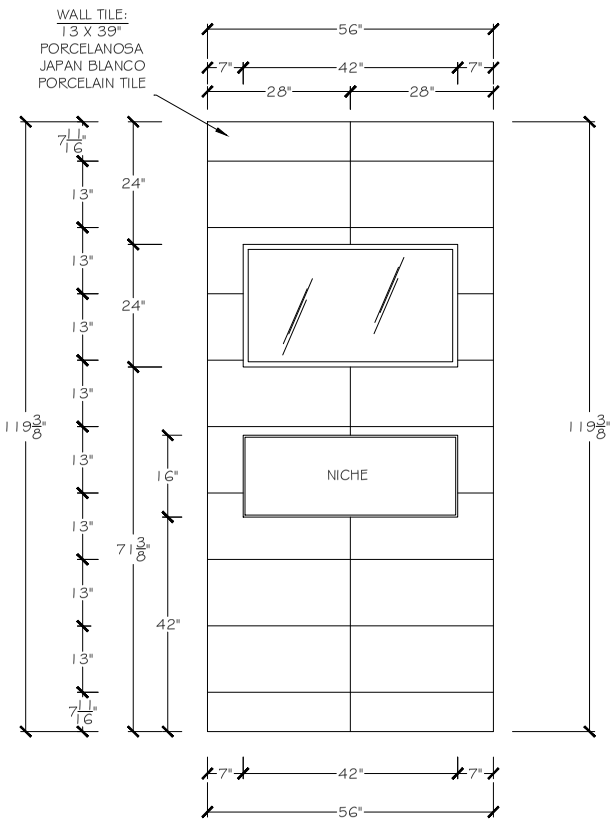

B ELEVATION

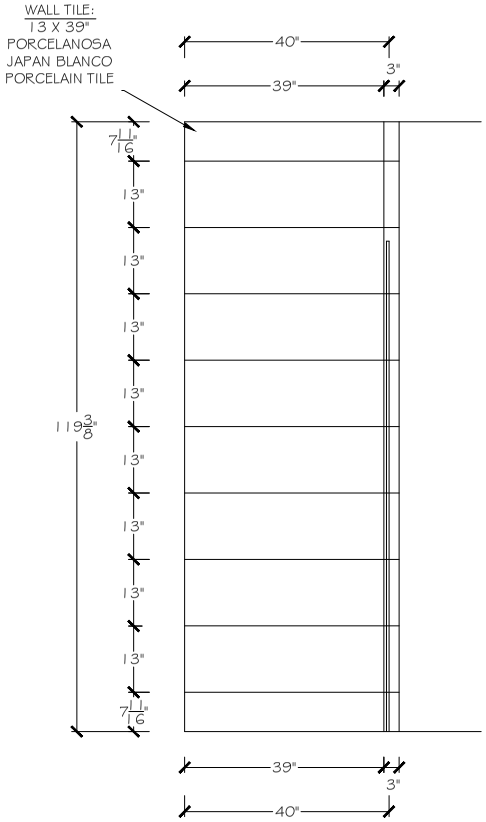

C ELEVATION

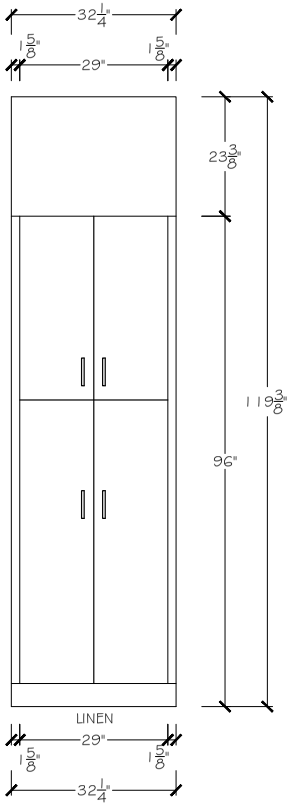

D ELEVATION

ELEVATIONS

SCALE: 1/2" = 1'-0"

THIS IS AN ORIGINAL DESIGN AND MUST NOT BE RELEASED OR COPIED UNLESS APPLICABLE FEE HAS BEEN PAID AND ORDER PLACED. COPYRIGHT. ALL RIGHTS RESERVED

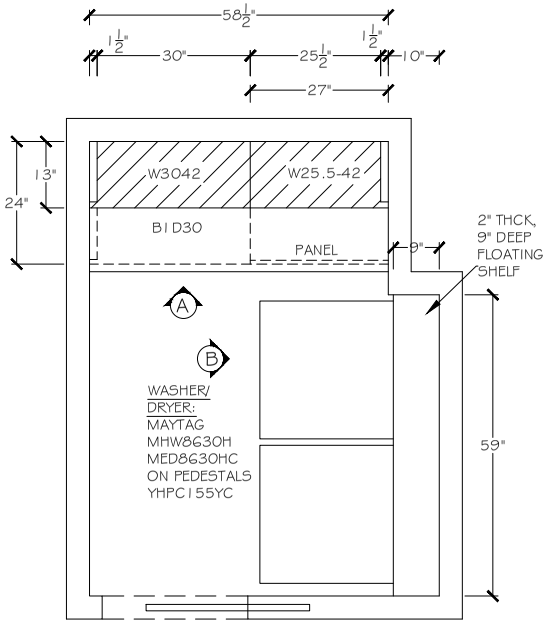

LAUNDRY

CEILING HT: 119.375"

FLOOR PLAN

SCALE: 1/2" = 1'-0"

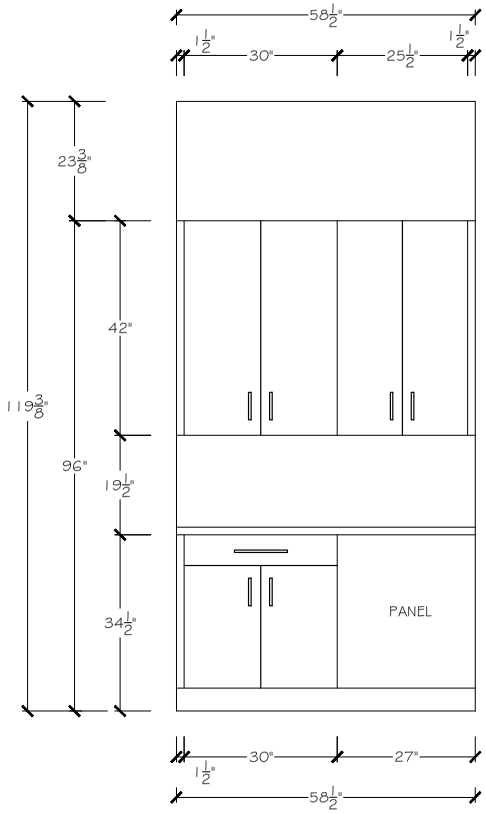

A ELEVATION

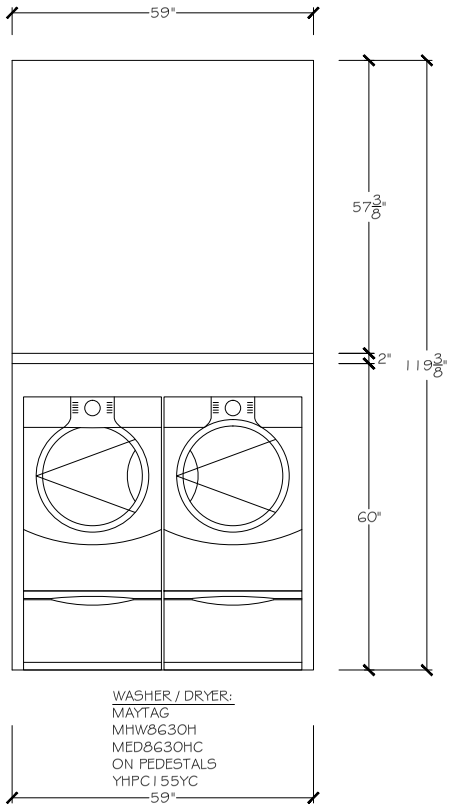

B ELEVATION

ELEVATIONS

SCALE: 1/2" = 1'-0"

Tervola Designs | Kitchens | Bathrooms | Renovations | 142 Kupuohi St, Ste F6, Lahaina, HI 96761 | 808.385.9971 | www.tervoladesigns.com

PAGE NUMBER	DATE:	REVISION#	DESIGNER:	
11 OF 14	JUNE 12, 2025		CINDY TERVOLA	

THIS IS AN ORIGINAL DESIGN AND MUST NOT BE RELEASED OR COPIED UNLESS APPLICABLE FEE HAS BEEN PAID AND ORDER PLACED. COPYRIGHT. ALL RIGHTS RESERVED

EISMON RESIDENCE

LAUNDRY

DRAWINGS ARE FOR ILLUSTRATION PURPOSES ONLY, EXACT LOCATIONS & CONFIGURATIONS MAY VARY DUE TO JOBSITE CONDITIONS.

APPROVED BY :

X _____ X _____

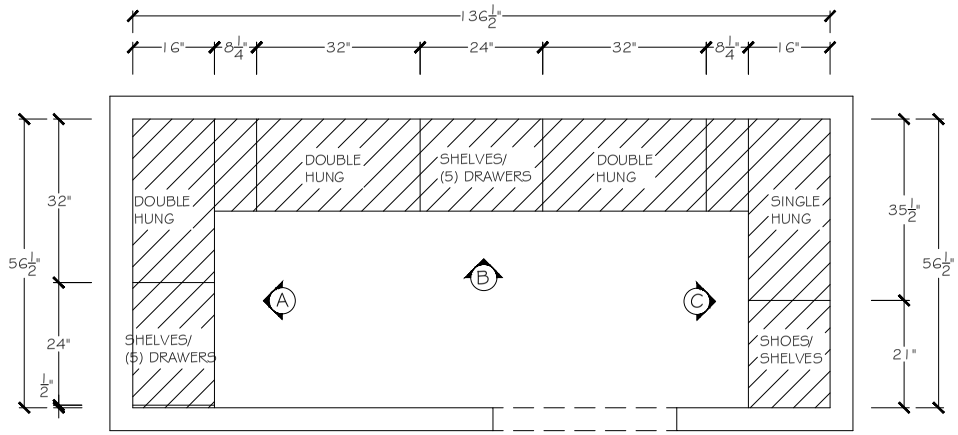

PRIMARY CLOSET

CEILING HT: 119.375"

FLOOR PLAN

SCALE: 1/2" = 1'-0"

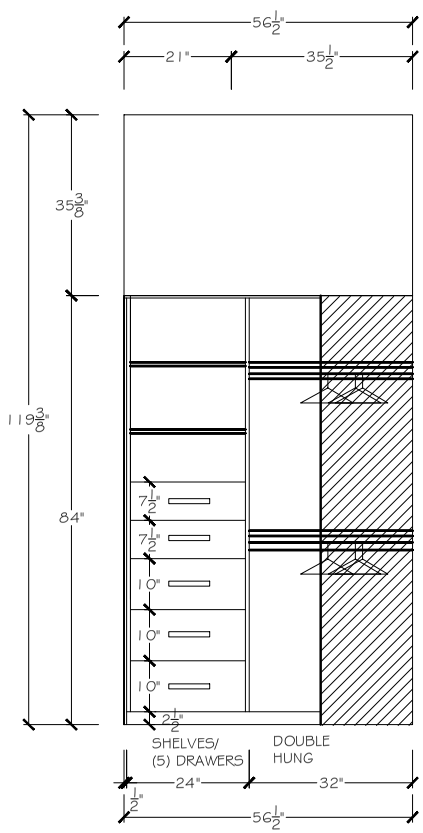

B ELEVATION

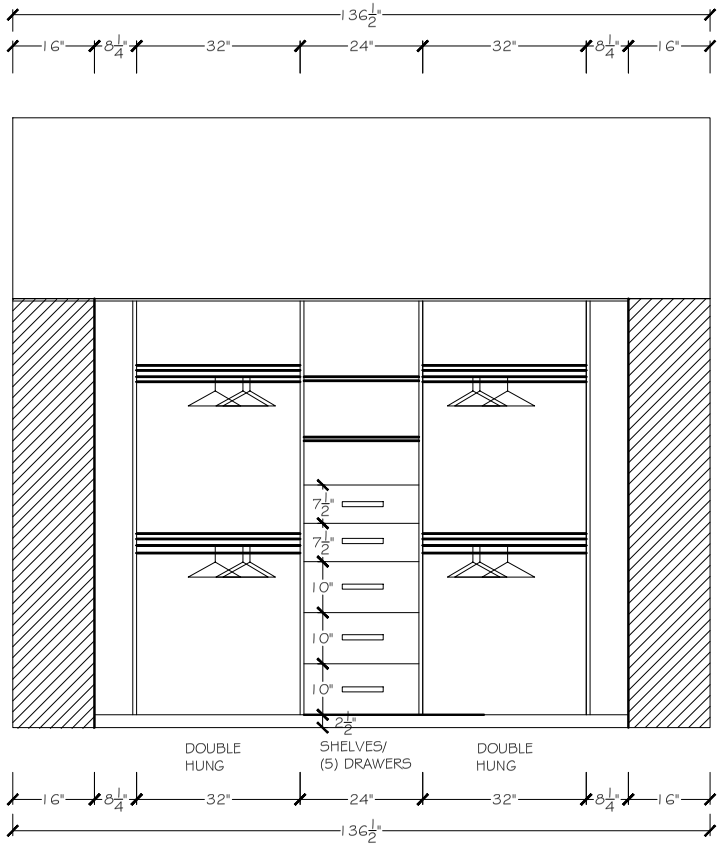

C ELEVATION

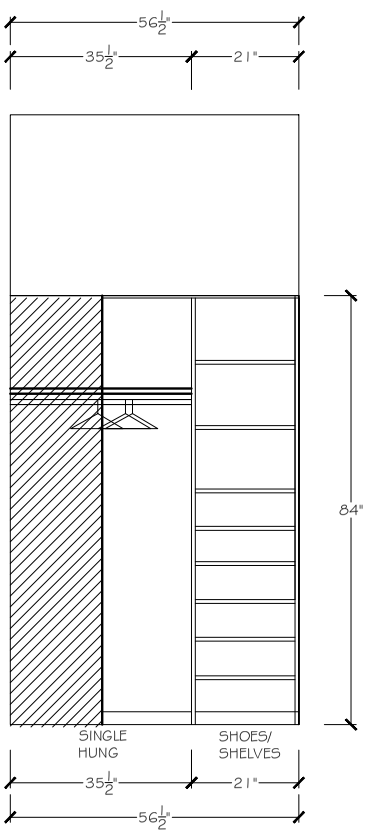

D ELEVATION

ELEVATIONS

SCALE: 1/2" = 1'-0"

Tervola Designs | Kitchens | Bathrooms | Renovations | 142 Kupuohi St, Ste F6, Lahaina, HI 96761 | 808.385.9971 | www.tervoladesigns.com

PAGE NUMBER	DATE:	REVISION#	DESIGNER:	
13 OF 14	JUNE 12, 2025		CINDY TERVOLA	

THIS IS AN ORIGINAL DESIGN AND MUST NOT BE RELEASED OR COPIED UNLESS APPLICABLE FEE HAS BEEN PAID AND ORDER PLACED. COPYRIGHT. ALL RIGHTS RESERVED

EISMON RESIDENCE

PRIMARY CLOSET

DRAWINGS ARE FOR ILLUSTRATION PURPOSES ONLY, EXACT LOCATIONS & CONFIGURATIONS MAY VARY DUE TO JOBSITE CONDITIONS.

APPROVED BY :

X _____ X _____

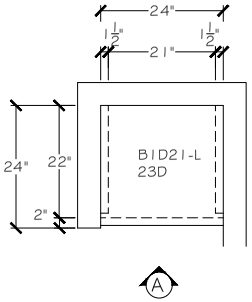

ENTRY

CEILING HT: 119.375"

FLOOR PLAN

SCALE: 1/2" = 1'-0"

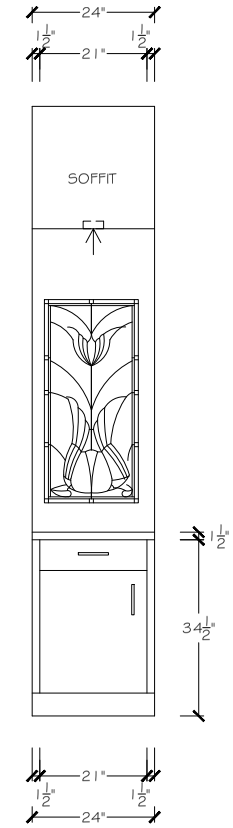

A ELEVATION

ELEVATION

SCALE: 1/2" = 1'-0"

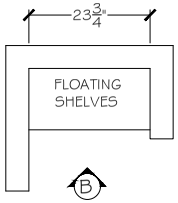

GARAGE ENTRY

CEILING HT: 119.375"

FLOOR PLAN

SCALE: 1/2" = 1'-0"

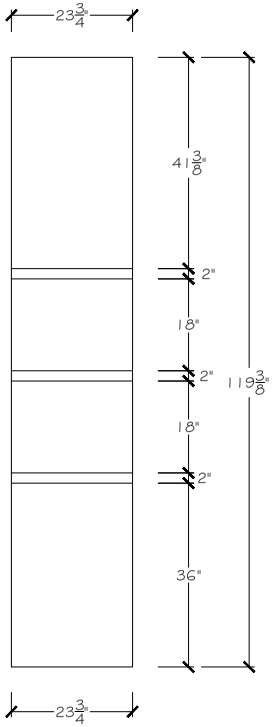

B ELEVATION

ELEVATION

SCALE: 1/2" = 1'-0"

Tervola Designs | Kitchens | Bathrooms | Renovations | 142 Kupuohi St, Ste F6, Lahaina, HI 96761 | 808.385.9971 | www.tervoladesigns.com

PAGE NUMBER	DATE:	REVISION#	DESIGNER:	
14 OF 14	JUNE 12, 2025		CINDY TERVOLA	

THIS IS AN ORIGINAL DESIGN AND MUST NOT BE RELEASED OR COPIED UNLESS APPLICABLE FEE HAS BEEN PAID AND ORDER PLACED. COPYRIGHT. ALL RIGHTS RESERVED

EISMON RESIDENCE

ENTRY / GARAGE ENTRY

DRAWINGS ARE FOR ILLUSTRATION PURPOSES ONLY, EXACT LOCATIONS & CONFIGURATIONS MAY VARY DUE TO JOBSITE CONDITIONS.

APPROVED BY :

X _____ X _____